Section 5:
Planning and Response, Cadre, and Functional Support Teams

Section 5: Planning and Response Teams (PRTs)

Mission Planning and Response Teams	5-1
Mission PRT Overview	5-2
Mission Planning and Response Teams	5-3
Example of Deployment Locations for Temporary Power PRT	5-5
Example of Deployment Locations for Temporary Roofing PRT	5-6
PRT Rotation, Activation, and Deployment	5-7
Example of PRT Rotation Table	5-8
Example of Functional Cadre Rotation Table	5-9
Urban Search and Rescue Structural Specialist (StS) Cadre	5-11
Contingency Support Team Concept of Operations	5-12
Contingency Support Team EOC Support Cell	5-13
Functional Cadres External	5-14
Functional Cadre/PRT Overview	5-15
External Affairs PRT	5-16
USACE Logistics Activity (ULA) Cadre	5-17
Safety Cadre Concept of Operations	5-18
Enterprise Emergency Response Team - Concept of Operations	5-19
Enterprise Emergency Response Team - Activation Process	5-20
Resource Management Cadre	5-21
Geographic Information Systems (GIS) Cadre of Subject Matter Experts	5-22
Requesting Geographic Information Systems (GIS) Cadre Assistance	5-23
HQ After Action Report (AAR)	5-24

Mission Planning and Response Teams

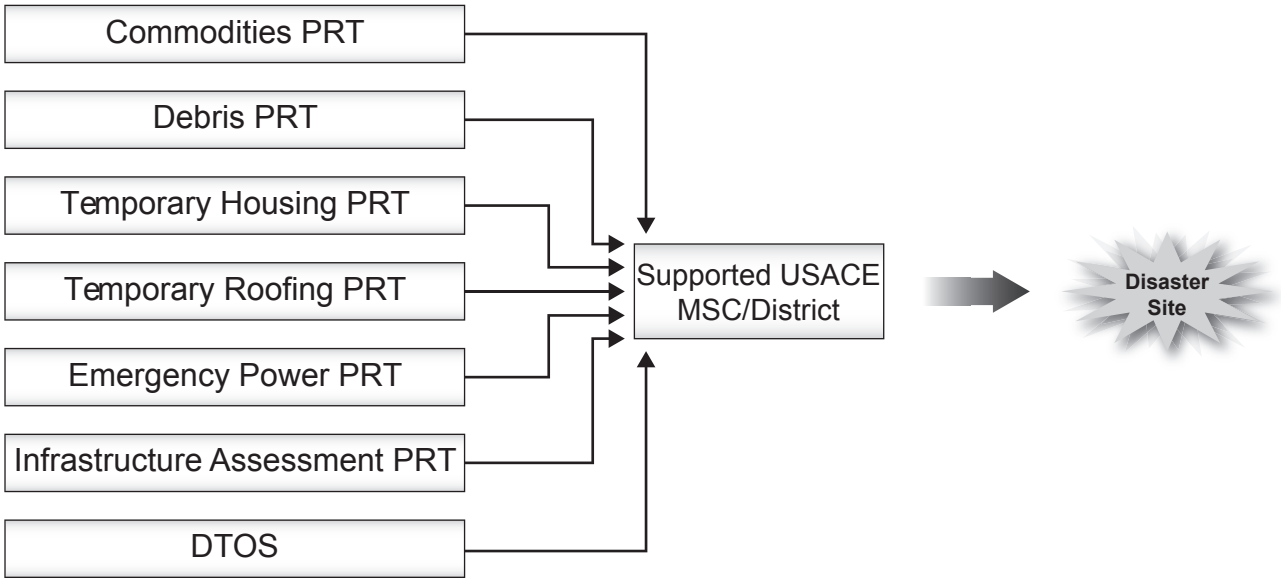

Mission PRT Overview

- There are 41 designated Stafford Act mission Planning and Response Teams (PRTs) within USACE.
- These teams are staffed and trained to respond to the pre-scripted Stafford Act missions assigned to USACE as the primary agency for ESF #3 Public Works and Engineeering response and the coordination agency for ESF #3 response and recovery under the National Response Framework.
- PRTs are sourced and managed for recruitment, training, and readiness by designated host USACE districts. MSCs have the option to deploy and use their MSC organic PRTs if they are not engaged, or they may request PRT support from HQUSACE.
- PRTs are configured to provide trained personnel at every organizational level necessary for mission execution (e.g., NRCC, RRCC, District, RFO/EFO, JFO, Staging Operations.
- PRTs are designated as either response (Commodities Distribution, Temporary Emergency Power, or Structural Safety Specialist to Urban Search and Rescue) or recovery (Debris Removal, Temporary Roofing, Temporary Housing and CPF, and Infrastructure Assessment).
- Each PRT is divided into two elements: management and support. The management element is that PRT initial cell typically required to scope and develop the mission requirements. Additional support elements are requested as required. On pages 5-3 and 5-4 the **bolded** PRT positions listed are considered to be the management element of that PRT. The non-bolded PRT positions listed are considered to be support elements of that PRT.

Mission Planning and Response Teams

Missions & Lead MSCs	PRT District(s)	Team Composition (Management Element in bold)
Commodities Distribution SWD	• Galveston • Rock Island • Norfolk • Wilmington	**Action Officer** **Mission Manager** **Mission Specialist** **Commodity Data Specialist** **Commodity Site Manager** **Commodity QA Supervisor** **Mission Liaison** **Commodity QA** **Administrative Specialist**
Emergency Power LRD	• Pittsburgh • Memphis • Walla Walla • Honolulu • Tulsa • Savannah • Albuquerque	**Type III Team:** **Action Officer** **Mission Manager (2)** **Mission Specialist (3)** **Mission Liaison** **Logistics Specialist (2)** **QA (2)** **249th Section (9)** *SME*

Mission Planning and Response Teams

Missions & Lead MSCs	PRT District(s)	Team Composition (Management Element in bold)
Debris MVD	• Louisville • New Orleans • Baltimore • Fort Worth • Sacramento • Mobile • Vicksburg	**Action Officer** **Mission Manager** **Resident Engineer** **Contract Specialist** *Mission Specialist* *Office Engineer (2)* *Real Estate Specialists (2)* *QA Supervisors (2)* *NEPA Compliance Manager* *Environmental Engineer* *Database Manager*
Temporary Housing & Critical Public Facilities SAD	• Huntington • St. Paul • Huntsville • New York • Los Angeles • Jacksonville	**Action Officer** **Mission Manager** **Mission Specialist** **Sanitary Engineer** **Electrical Engineer** *Contract Specialist* *QA Supervisor* *QA Inspector* *Cost Estimator* *Resident Engineer* *Database Manager* *NEPA Compliance Specialist* *Site Engineer* *Area Engineer* *Administrative Assistant* *GIS/CADD Specialist*
Temporary Roofing NWD	• St. Louis • Omaha • Nashville • Little Rock	**Action Officer** **Mission Manager** **Mission Specialist - Operations** **Resident Engineer** **SME (2)** *Mission Specialist – Staffing* *Mission Specialist – Reports* *Realty Specialist* *Contract Specialist* *QA Trainer* *Administrative Assistant* *Material Control Specialist (2)* *Resident Engineer* *QA Supervisor (2)* *ROE Data Manager (2)* *ROE Collector (4)* *QA Team Leader (4)*
Infrastructure Assessment SPD	• Buffalo • Alaska • Charleston • Sacramento • Seattle	**Action Officer** **Mission Manager** **Mission Specialist** **Mission Data Manager** *ACT – 20/45 Training Officer* *Supervisory Inspection Team Leader* *Inspection Team Leaders*

Example of Deployment Locations for Temporary Power PRT

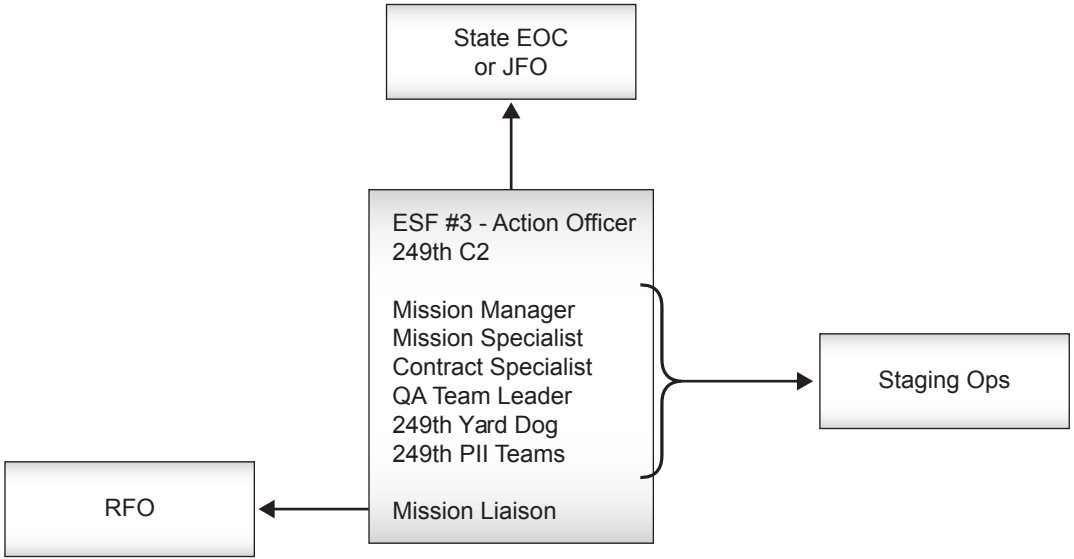

Example of Deployment Locations for Temporary Roofing PRT

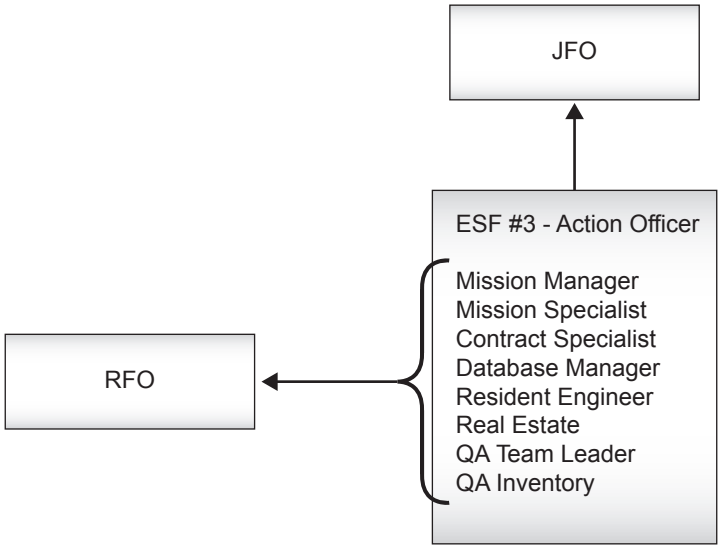

PRT Rotation, Activation, and Deployment

Rotational Assignments: The rotation of PRTs is maintained on ENGLink Interactive. Rotational assignments are maintained until the PRT is deployed or removed from rotation at the request of the MSC Commander due to direct involvement in response to events within their own geographic Area of Resonsibility (AOR). Current rotational assignments are maintained on ENGLINK Interactive at https://englink2.usace.army.mil, and rotation assignments are set by the UOC in coordination with the proponent MSC of the Stafford Act mission.

Alert: PRTs will be placed on alert only when there is an imminent threat or when an event has occurred that could result in FEMA Mission Assignments. The number of PRTs alerted will vary depending on the specific event. For a major event, the top three-to-four PRTs will be alerted in each potential mission area. PRTs are always on alert for events within their Major Subordinate Command AOR. Once on alert, the PRTs are required to be in transit within six hours of deployment notification.

Deployment: The impacted MSC has the option of using the PRTs from its own organic districts first, but should consider where they stand on the National level rotational list. External PRTs will be deployed only at the request of the supported MSC. Once deployed, PRTs are attached to the supported MSC.

- PRTs are deployed for the duration of the mission. The supporting district is responsible for rotation of personnel in coordination with the supported district.
- **Pre-event:** PRT deployment at times includes the management element of the PRT. The support element may deploy later, as/if required. The exceptions are typically pre-event full deployments of the Temporary Emergency Power PRT, Commodity PRTs, and additional personnel for the Temporary Roofing PRT.
- **Post-event/Post-Declaration:** Includes deployment of the support elements of the PRTs.

Disengagement: The disengagement date is established by the Supported MSC.

Example of PRT Rotation Table

	LRD	MVD	NAD	NWD	POD	SAD	SPD	SWD	HQ
Combined Commodities (SWD)		MVR 4	NAO 2			SAW 1		SWG 3	
Contingency Support Team (NAD)	LRD 2	MVD 1	NAD 8	NWD 7	POD 4	SAD 3	SPD 6	SWD 5	
Debris Removal (MVD)	LRL 5	MVK 3 MVN 6	NAB 7			SAM 2	SPK 4	SWF 1	
Emergency Power (LRD)	LRP 3	MVM 1		NWW 5	POH 4	SAS 7	SPA 6	SWT 2	
Enterprise Emergency Response Team (HQ)									EERT Red 3 EERT White 1 EERT Blue 2
External Affairs (HQ)									EA-1 1
Infrastructure Assessment (SPD)	LRB 3			NWS 5	POA 2	SAC 4	SPK 1		
Temporary Housing (SAD)	LRH 2	MVP 4	NAN 6			SAJ 5	SPL 1		HNC 3
Temporary Roofing (NWD)	LRN 1	MVS 3		NWO 2				SWL 4	

Example of Functional Cadre Rotation

	LRD	MVD	NAD	NWD	POD	SAD	SPD	SWD	HQ	
DTOS Support Team (HQ)	ECCV08 8 MCV1 16	ECCV10 10	MCV3 18 ECCV07 7	ECCV11 11	CTOC-POH 19	ECCV01 1 ECCV05 5 MCV2 17 ECCV04 4 ECCV03 3 ECCV02 2 ECCV06 6 CTOC-SAM 21	ECCV15 15 ECCV12 12 ECCV13 13 ECCV14 14	ECCV09 9		HQ 20
ENGLink Strike Team (HQ)						SAM 2				EST 1
GIS Cadre (HQ)										Blue 4 Black 1 Red 2 White 3
Local Government Liaison (HQ)										Blue 3 Red 1 White 2

Example of Functional Cadre Rotation

	LRD	MVD	NAD	NWD	POD	SAD	SPD	SWD	HQ
Logistics Support (HQ)									ULA-4 3 ULA-1 5 ULA-2 1 ULA-3 2 ULA-5 4
Logistics Support Alternate (HQ)									LPOD RLP 2 RLM 4 ULA-6 3 Log OPNS Ctr - LOC 1 LCRSME 5 PWR SPT 6 LST 7
Resource Management (HQ)									HQ 1
Safety Occupational Health (HQ)	LRD 8	MVD 5	NAD 7	NWD 6	POD 8	SAD 2	SPD 3	SWD 4	CTR 1

Urban Search and Rescue Structural Specialist (StS) Cadre

Mission: To provide Structures Specialist (StS) support to the DHS Federal Emergency Management Agency (FEMA) mission response effort under Emergency Support Function #9 (ESF #9), Search and Rescue (SAR), of the National Response Framework (NRF). This includes developing, training, and equipping USACE structural engineers to support the Urban Search and Rescue (US&R) Task Forces and the US&R Incident Support Team (IST) engineering cell. The USACE US&R Program also develops and provides training for all US&R Structures Specialists.

Additional Mission Capabilities:

- Provide technical assistance to local jurisdictions regarding rescue efforts.
- Provide technical assistance to military personnel that provide light to heavy US&R support.
- Provide heavy structural assessment of damaged structures due to any type of event.
- Provide other agency technical support (e.g., FBI, DEA, ATF, NIST, etc.).

The Corps Structures Specialist Cadre is an essential component of the FEMA Urban Search and Rescue Task Forces and the IST with the ability for fast deployment in a life saving mission. The Structures Specialist brings engineering expertise to the Urban Search and Rescue Task Force. Responsible for evaluating the immediate structural conditions at the incident and recommending the appropriate hazard mitigation, the Structures Specialist serves a vital function to the Task Force or the Rescue/Recovery Team. The Corps Structures Specialists Cadre is comprised of USACE Professional Engineers with at least 5 years of engineering experience consisting of structural design and basic construction techniques for wood, masonry, concrete, and steel. Mission durations are short, usually 6 to 10 days. StS deploy within 6 hours of notification with an equipment cache and are able to self-sustain for 72 hours to a limited degree.

The US&R StS Cadre is activated and deployed nationally at the direction of the ESF #9 Team Leader at the NRCC.

Contingency Support Team Concept of Operations

The Contingency Support Team's (CST) purpose is to provide immediate and experienced assistance to a supported district in performing management and operation requirements resulting from one or more notice or no-notice events. The intent of the CST is to provide the local commander with trained personnel experienced in disaster response. The CST will augment leadership and technical staff; initially in RM, Logistics and EOC activities; and to return to home station within 30 days. Each MSC Commander is tasked to establish a CST composed of SMEs in the EM, RM, Logistics, and ENGLink functional areas. The MSC Commander must ensure the resources are available to support the CST missions. The responsibilities of the team within its region are to review and become familiar with each district's response plans, provide training guidance, and provide immediate assistance during the initial phase of the response operations. Upon activation of the CST, an Enterprise Emergency Response Team Member (EERT) and External Affairs (PAO Action Officer) will be assigned to the CST. The CST should be used in anticipation of establishing a Recovery Field Office (RFO).

Contingency Support Team EOC Support Cell

The following outlines the composition of a CST:

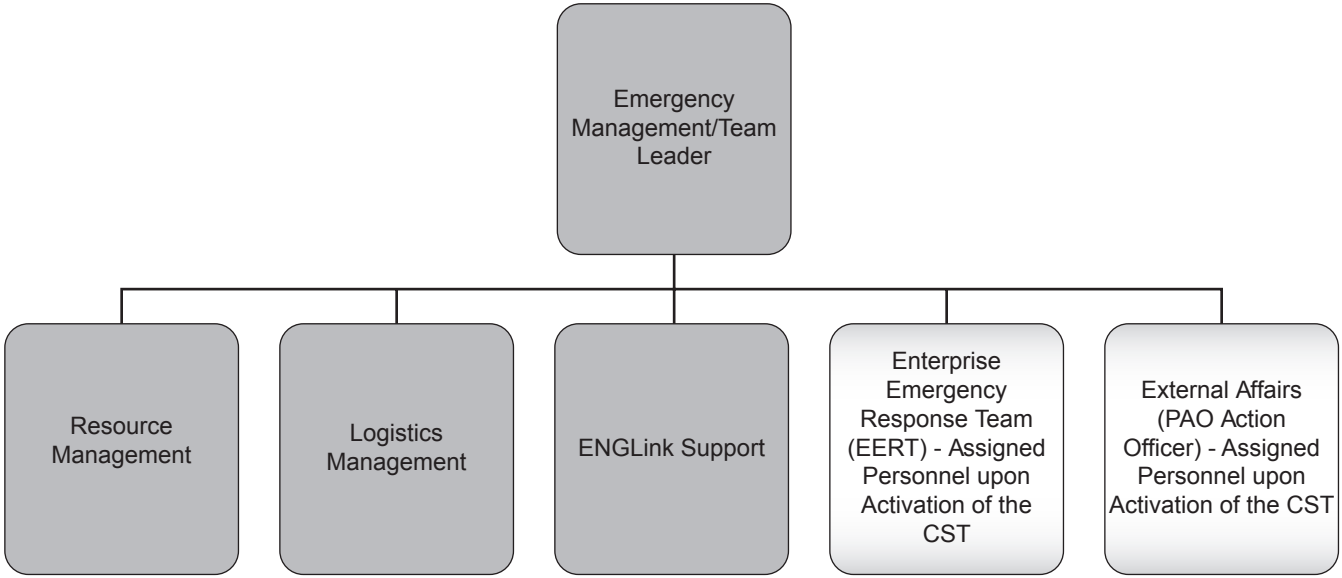

Additional information on the team structure and duties can be found at: https://englink2.usace.army.mil

Functional Cadres External

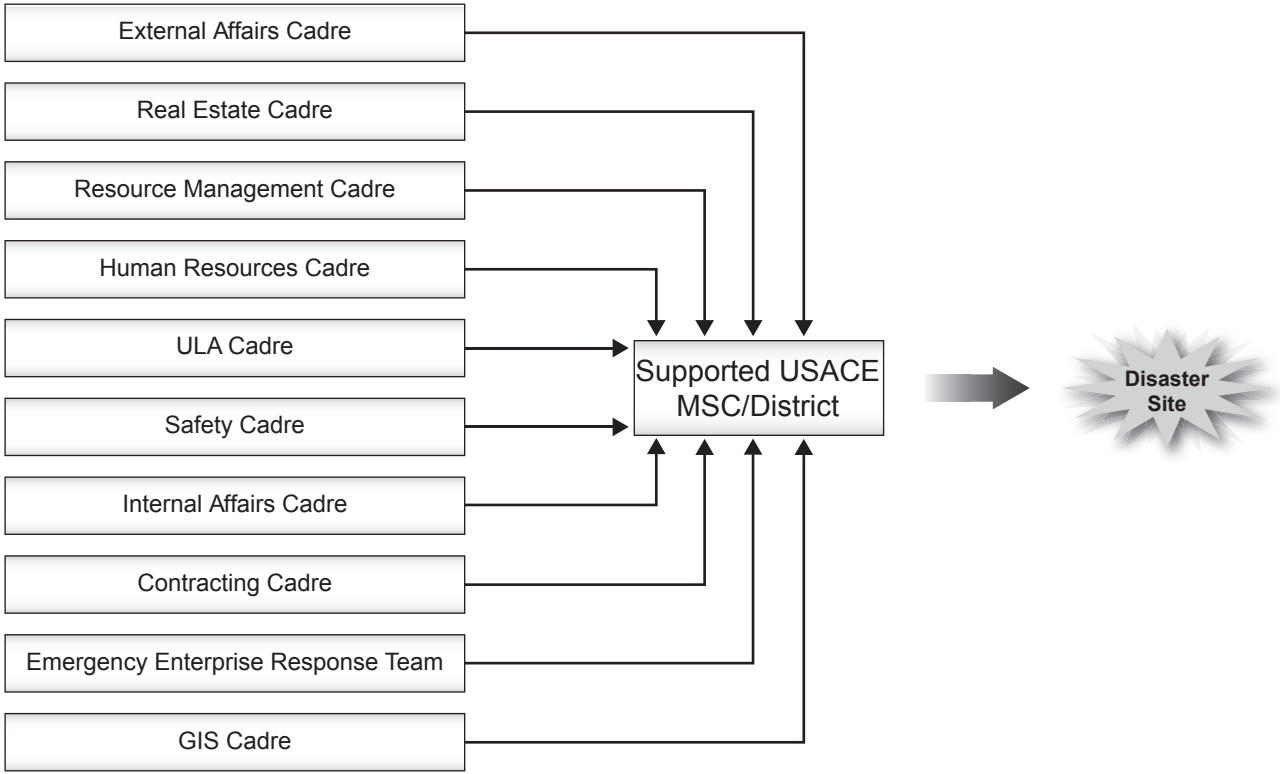

Functional Cadre/PRT Overview

- Functional cadres are maintained to provide resources to the aforementioned CST and to augment supported District or Division/MSC EOC staffing on a single resource personnel tasker request for functional support.
- These functional cadres can also provide SMEs to serve as advisors.
- They provide resource augmentation to supported commands with expertise in their separate functional areas.
- These resources are trained to complement the supported command capabilities as they accomplish the additional workload associated with responding to natural disasters and national emergencies.

External Affairs PRTs

HQUSACE, MSC, and District External Affairs resources are not adequate to meet the demands of most large scale disasters or special operations in which they are engaged. External Affairs assistance and augmentation are simultaneously needed at Emergency Operations Centers (EOCs), JFOs, AFOs, RFOs, EFOs, the USACE Operations Center (UOC), and the FEMA Headquarters.

Failure to manage information with aggressive External Affairs campaigns will damage the USACE's reputation, perpetuate misconceptions, and fail to communicate USACE's key roles during natural disasters and contingency operations.

USACE has established trained and deployable External Affairs PRTs to augment existing MSC and USACE External Affairs (EA) resources in the performance of aggressive, coordinated communication campaigns

External Affair PRT Objectives:

- Tell the USACE and Federal story (locally, regionally, nationally, internationally, and online) through interviews, written and visual products, and website and social media.
- Provide early EA presence in the disaster area and key disaster response offices, to include FEMA.
- Provide professional, trained, and focused external affairs augmentation.
- Provide valuable information to the public.
- Ensure "One Voice" at all levels and with FEMA.
- Coordinate news briefings and media tours of USACE operations.
- Capture lessons learned and historical information.

USACE Logistics Activity (ULA) Cadre

USACE Logistics Activity Provides:
- A central point for current logistics operations
- Deployed logistics services for civil and contingency operations
- A single point of contact (24/7) for local, regional, and national logistics planning and operations

ULA 24/7 Phone Number: 901-874-5832

Services provided to USACE supported organizations and responders:
- Reception, Staging, Onward movement, and Integration (RSO&I)
- Transportation services, such as travel, fleet vehicle management, and freight shipping
- Logistics element of CSTs
- Supply, visibility items, and property management/accountability
- Five standing teams currently (all volunteer)
- Setup Recovery Field Office (RFO), if requested
- Five trained and certified logisticians per team
- Provide Facilities management and service support for RFO
- Additional ULA members and retired annuitants available as augmentation
- Coordinate RFO security procedures, if required

Process for requesting support:
- First 24-36 hours, local support is provided by the District Logistics Manager (DLM) staff
- Request for ULA augmentation (LPRT/LST/SME) submitted from District/MSC to UOC
- ULA receives/fills tasker
- Teams/SMEs begin movement within six hours and arrives on the site by 24-36 hours

Safety Cadre Concept of Operations

The Chief, Safety and Occupational Health (SOH), HQUSACE, functions as the SOH primary support designee for natural and technological disaster preparedness and response. An SOH professional from that office functions as the National Program Manager with the authority for overall responsibility for the SOH.

The SOH National Program Manager will identify several highly qualified SOH professionals from MSC or district personnel. The primary function of these personnel will be to provide “up front” recommendations to the MSC Commander regarding the impact of a disaster on the affected area’s population and infrastructure. These selections will be made during the pre-disaster phase of the life-cycle management. At the request of the impacted MSC Commander and based on a tasker from the UOC, a SOH Cadre manager will deploy to the location identified by the MSC Commander. In most cases, deployment will commence immediately after the event. Deployment to accomplish this mission will typically last seven to 14 days for the SOH Cadre manager. The role of the SOH Cadre manager is to provide an on-site assessment of SOH resources needed, provide on-the-job training to the support district/RFO SOH manager on disaster response SOH issues, and establish the basic structure of the on-site SOH Office.

Based on the determination made by the MSC Commander, a SOH Cadre may be placed on alert for possible deployment. The basic SOH Cadre is comprised of three SOH professionals. The mix of SOH professionals can and will be changed to support the specific mission most effectively.

The SOH cadre has a proven track record for preventing further loss of life, property, and environment through successful support to the primary PRTs such as Debris, Temp Roofing, Temp Housing, and Infrastructure Assessment/Demolition and should be integrated throughout the full mission life cycle to include AARs and implementation of corrective actions to further mitigate risk in future operations.

Enterprise Emergency Response Team - Concept of Operations

The Enterprise Emergency Response Team (EERT) is an 10-member team that is capable of providing, or aiding with the acquisition of, most all information technology needs for emergency events, together with partner Lockheed-Martin.

EERT consists of members who have experience in:

- Providing communications within just a few hours as first responders
- Deployment to Iraq (as non-ACE-IT EERT)
- Working with, or on, the DTOS team and knowing this function well
- Working in an RFO situation as EERT Project Managers, IT Mission Managers, and help desk touch labor
- Working as System Administrators supporting deployed personnel
- Working in Emergency Management offices

Enterprise Emergency Response Team - Activation Process

ACE-IT Enterprise Emergency Response Team (EERT) notification will be through the ACE-IT Enterprise Service Desk (ESD), and local ACE-IT IT Chief and/or ACE-IT Operations Officer. Very early on, an ACE-IT IT Chief will be identified as the IT Mission Manager for the event.

- Upon notification from ESD and receipt of MIPR funding, EERT is deployable within 12 hours.
- A cache of common equipment is stored and ready for deployment to meet the EERT on-site.
- EERT will assess and determine the most expeditious method for establishing communications (SAT/DTOS/TSP/Hotel-Business DSL/etc.).
- During operations, additional requests for EERT support will require approval from the designated IT Mission Manager.
- EERT will work with the IT Mission Manager to plan, order, and deploy all incremental units of equipment, and service requirements.
- EERT will work with the IT Mission Manager to request Lockheed Martin surge support for “Touch Labor.”
- ESD will provide 24/7 support for the duration of the event.
- EERT will work with event Mission Managers (EM, IT, ULA, Contracting, etc.) to identify additional facilities (RFOs/EFOs).

Resource Management Cadre

The Resource Management (RM) Cadre is comprised of qualified volunteers who have the permission of their supervisor/commander. Individuals of the RM Cadre have skills in budgeting or accounting, with a strong background in the USACE Financial Management System (CEFMS). Cadre members will deploy immediately after notification by their EOC. Deployment normally will not exceed 30 days.

RM Cadre's responsibilities are to:

- Assist the supported MSC/District Commander, through the resource manager, during an emergency operation.
- Assist with the timely execution of Mission Assignments by providing budget and accounting support until the emergency is physically and financially complete.
- Maintain competency by experience, on-the-job training, and formal classroom training (e.g., Financial Management of Emergency Management Program and Resource Management Functional Support cadre training).
- Be ready to deploy within six hours of notification.
- Participate in after-action critiques at the request of the MSC/District Commander.

Geographic Information Systems (GIS) Cadre of Subject Matter Experts

Overview

The GIS Cadre is prepared to respond to all types of natural and man-made disasters, including hurricanes, wildfires, earthquakes, mudslides, floods, tsunamis, tornadoes, winter storms, and terrorism. Team members have experience directly supporting ESF #3 and ESF #5 at Joint Field Offices and Recovery Field Offices, and they have been called upon to support the USACE Operations Center and FEMA National Response Coordination Center. GIS Cadre team members have developed a national geospatial data set, standardized map templates, and standardized cartographic symbology sets that are available on portable hard drives. A Pre-Scripted Mission Assignment enables FEMA to deploy the GIS Cadre to assist the ESF #5 Team Leader and/or the ESF #5 GIS Coordinator at the RRCC, JFO, and/or other sites, at their direction. Deployment duties include advising, assessing, and coordinating Remote Sensing/GIS needs. The Cadre members will ensure that RS/GIS products, including mapping, modeling, or imagery, are produced and disseminated to decision makers and responders as needed; ensure any duplication of efforts is eliminated; confirm needed talents and resources are available to support the response operations; and verify ESF #5 requirements for GIS staffing, if needed, are met.

Mission Statement

- To provide fast, efficient, and accurate mapping products and analysis in support of U.S. Army Corps of Engineers and FEMA emergency management needs.

Team Structure

- The GIS Cadre of SMEs consists of four on-call teams comprised of six to seven GIS Specialists. Each team is led by an Action Officer, and the teams rotate on a monthly basis. A Reserve Roster of over 100 GIS Specialists may be called upon if needed. GIS Specialists and Action Officers come from a variety of disciplines (e.g., H&H, CADD integration, environmental, surveying, and planning) in addition to their expertise in applying GIS to response and recovery operations.

Requesting Geographic Information Systems (GIS) Cadre Assistance

Requesting Assistance

Assistance may be requested from FEMA or the Supported District.

- FEMA Requests:
  1) FEMA GIU Lead identifies requirement.
  2) FEMA GIU Lead contacts USACE ESF#3 Team Leader.
     Or contacts USACE Supported District EOC.
     Contact may be initiated through ESF#5 Lead.
  3) Supported District may fill the requirement if personnel are available.
  4) If Supported District personnel are not available, the request is forwarded to the Supported Division.
  5) If Supported Division personnel are not available, the request is forwarded to USACE Headquarters.
     HQUSACE contacts GIS Cadre and issues tasker.

- Supported District Requests:
  1) District Lead identifies requirement.
  2) Supported District may fill the requirement if personnel are available.
  3) If Supported District personnel are not available, the request is forwarded to the Supported Division.
  4) If Supported Division personnel are not available, the request is forwarded to USACE Headquarters.
     HQUSACE contacts GIS Cadre and issues tasker.

HQ After Action Report (AAR)

HQ After Action Report (AAR) was formerly known as the Independent Assistance and Assessment Team (IAAT).

Purpose: Provide the Deputy Commanding General for Civil Works and Emergency Operations an independent assessment of ongoing USACE emergency operations, identify successes/lessons learned from the perspectives of engaged commands, customers, and partners, and apply those lessons learned to future responses.

Objectives:

- Assess the USACE concept of operations and mission execution procedures.
- Evaluate progress and success of new initiatives.
- Identify command-wide issues/lessons learned.
- Analyze results to identify priorities for corrective action.